EX-FIX SERIES

EX Fixed Camera 316L

DESCRIPTION

The EX-FIX camera housing is a rugged corrosion proof camera housing designed for use in hazardous areas in onshore, offshore, marine and heavy industrial environments. The camera housing is constructed from electro-polished 316L stainless steel for maximum corrosion protection and is fitted with an 316L sun-shield and a thermostatically controlled heater element. The housing is not sold separately, it is only available in combination with a Siqura daylight camera module, such as the 33x zoom BC822v2H3-AS, 22x zoom 4K BC980H2-AS, or 4x zoom BC840v2-M04-AS, and an interface/cable tail (INT-RJ/SM/MM).

FEATURES

- Corrosion protected 316L stainless-steel
- ATEX, IECEx, UKEX and INMETRO certified
- IP66 / IP67
- Integrated power supply (24, 115 or 230 Vac)
- Integrated heater
- Electro-polished 316L sun-shield
- Optional direct to fiber
- Low maintenance



Description

Corrosion free 316L construction

The EX-FIX housing is designed for use in hazardous areas in onshore, offshore, marine and heavy industrial environments. 100% of the camera housing is made of corrosion proof 316L steel, protected against salty and sulfur rich environments.

ATEX, IECEx, UKEX and INMETRO certified

The EX-FIX is fully certified for hazardous areas zone 1 and 2 for gas and zone 21 and 22 for dust for Europe (ATEX), world-wide (IECEx), United kingdom (UKEX), and for Brazil (INMETRO). The certification includes the optical camera modules (BC822v2H3-AS, BC980H2 or BC840v2-M04-AS).

Mechanical			
Certification	ATEX; IECEx, INMETRO, UKEX		
Rating	Ex db op pr IIC T6 Gb -40°C Tamb +60°C		
	Ex tb III C T85°C Db -40°C Tamb +60°C		
	Ex db op pr IIB T5 Gb -40°C Tamb +75°C		
	Ex tb IIIC T100°C Db -40°C Tamb +75°C		
Ingress protection rating	IP66 / IP67		
Impact rating (casing)	IK10		
Body material	Electro-polished 316L stainless steel		
Window	High-grade Optical Tempered Glass		
- Size	diameter 75 mm; 10 mm thick		
Sunshield	Standard		
Operating temperature (Tamb)	-40 °C to +75 °C (-40 °F to +167 °F)		
Relative humidity	5% to 100%		
Cable entry	2x M25x1.5		
Weight	12.5 kg		

Electrical			
Power rating	EX-FIX24	EX-FIX115	EX-FIX230
	24 Vac +/-10%	115 Vac +/-10%	230 Vac +/-10%
	50/60Hz	50/60Hz	50/60Hz
Max power consumption	25 W	25 W	25 W
Internal Heater	Standard		
- Heater control	On:12°C +/- 4°C; Off: 20°C +/- 3°C		
- Heater power dissipation	10 W		

Ordering information	
EX-FIX24	EX Fixed Camera 316L 24VAC
EX-FIX115	EX Fixed Camera 316L 115VAC
EX-FIX230	EX Fixed Camera 316L 230VAC

Maintenance kits	
EX-MK F	Maintenance kit EX Fixed camera: O-Ring, screws, desiccant bags

Housing	Optical camera			Thermal camera		Interface					
	BC822v2H3-AS	BC980H2-AS	BC840v2-M04-AS	TC(R1)[2] -336	TC(R1)[2] -640	INT-RJ	INT-RJ5 INT-RJ10	INT-SM	INT-SM5 INT-SM10	INT-MM	INT-MM5 INT-MM10
EX-FIX24[1]	✓	✓	✓			✓	✓	✓	✓	✓	✓
EX-FIX24W	✓	✓	✓			✓	✓	✓	✓	✓	✓
EX-FIX24T				✓	✓	✓	✓	✓	✓	✓	✓
EX-PTZ24	✓	✓	✓			✓	✓	✓	✓	✓	✓
EX-PTZ24T				✓	✓	✓	✓	✓	✓	✓	✓
EX-PTZ24D	✓	✓	✓	✓	✓	✓	✓	✓[3]	✓[3]	✓[3]	✓[3]
EX-PTZ24D-IR	✓	✓	✓			✓	✓	✓	✓	✓	✓

[1]: This table also applies to the EX cameras versions for 115 Vac and 230 Vac.

© 20220503 TKH Security

[2]: R1 version is needed for hot-spot detection.

[3]: Special arrangements needed. Please contact TKH Security.

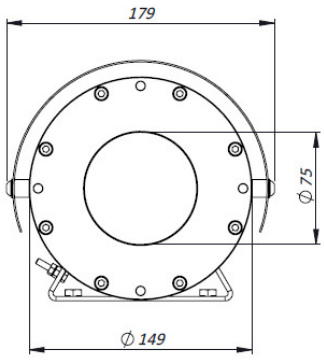

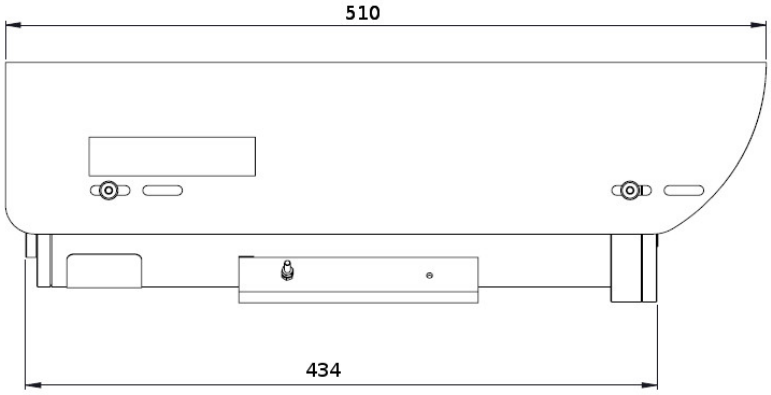

MOUNTING PATTERN

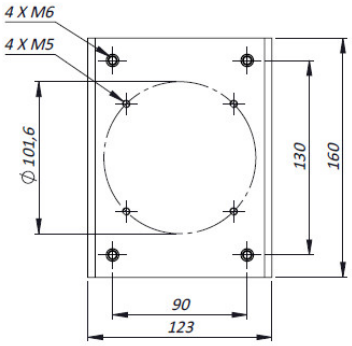

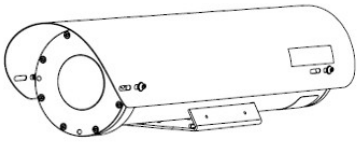

RELATED



Siqura BC822v2H3-AS
Assembly 33x zoom IP camera, 3MP, AF, Day/night, H.265/H.264



TKH Security BC980H2-AS
8MP IP Box camera with integrated 22x zoom lens



Siqura INT-RJ / INT-SM / INT-MM (EoL)
Network Interface and cable tail of the Siqura SA or EX cameras



Siqura EX-JB01
316L Ex e termination box for EX cameras



Siqura EX mounting accessories
316L Mounting accessories for the EX-FIX and EX-PTZ series