HSG04-IR

IR Lamp for HSG04

DESCRIPTION

HSG04-IR is an IR lamp accessory dedicated to adding lighting function to the HSG04 fixed housing. This IR lamp can be remotely controlled to zoom in and out via appropriate serial data control from the mounted box camera.



Lighting	
Beam Angle (Horizontal)	40° .. 10°
Distance	50 .. 160 m
Beam Pattern	Circular
LED Array	2 pcs High Power LED
Wavelength	850nm
Light Sensor Sensitivity	100 Lux (accessed via RS-485 control)
Control	
Digital Input	IR ON/OFF control
Digital Output	Light Sensor
Mechanical	
Power Input	from Camera Housing
Power Consumption	12W
Connector	ITB Touch Board
Dimensions (L x W x H)	135 x 106 x 111 mm
Weight	1.2 kg
Operating Temperature	-40 °C .. 50 °C
Storage Temperature	-40 °C .. 70 °C
Ordering Information	
HSG04	Outdoor Wiper housing for a fixed box camera

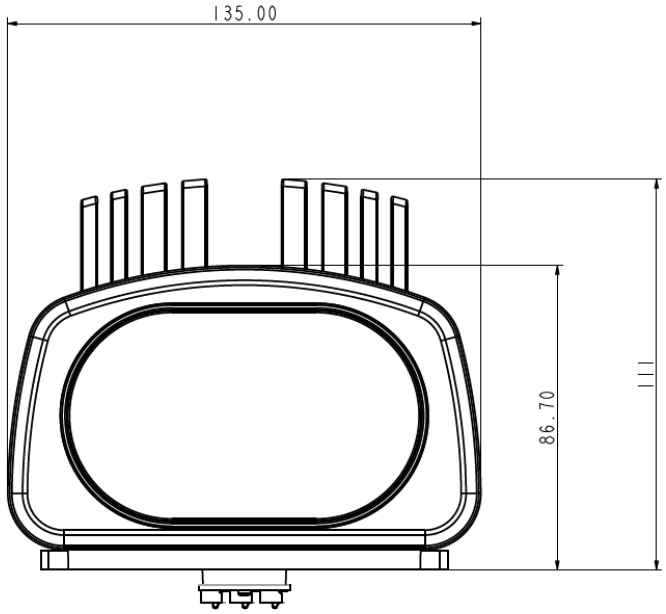
135.00
111
86.70

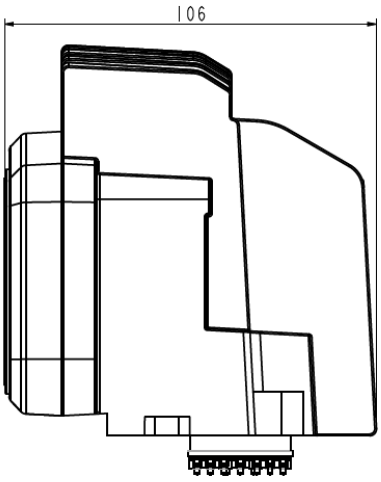
106

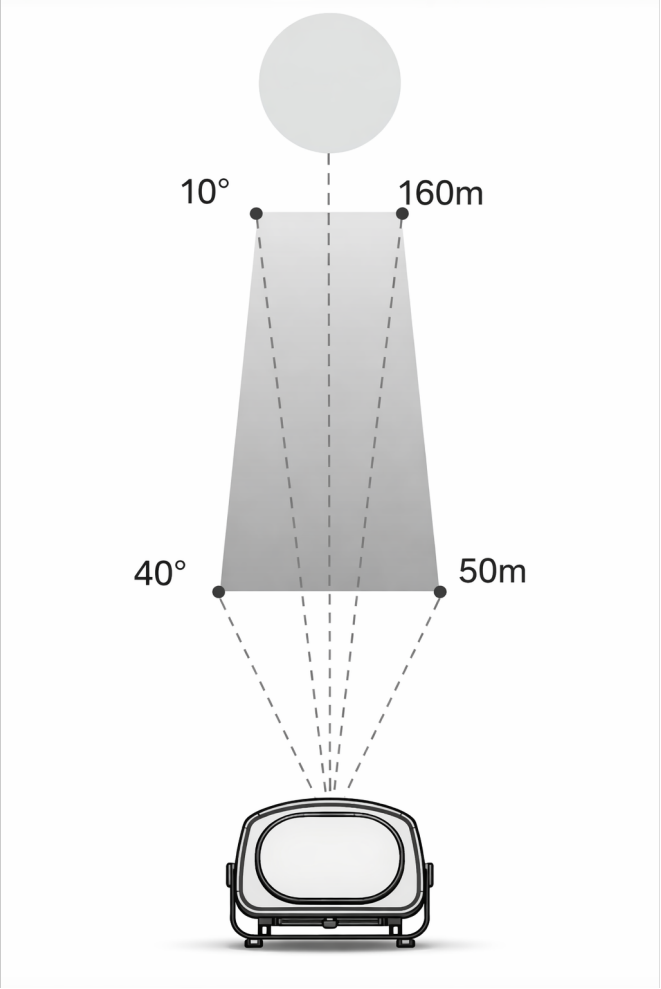
10°
160m
40°
50m

RELATED



TKH Security HSG04
Outdoor Wiper housing for a fixed box camera