HSG04-POLETOP

Pole top mount for HSG04, HSG05

DESCRIPTION

HSG04-PoleTop is a mount with swivel for the HSG04 and HSG05 fixed camera housings. It was designed to fit on a horizontal surface, typically a pole top.



Mechanical	
Materials	SPCC
Dimensions (L x W x H)	126 x 126 x 80 (mm)
Color	White
Max. Load	10 kg
Weight	0.15 kg

Ordering Information	
HSG04-PoleTop	Pole top mount for HSG04, HSG05
HSG04	Outdoor Wiper housing for a fixed box camera
HSG05	Outdoor fixed housing, 90-260VAC

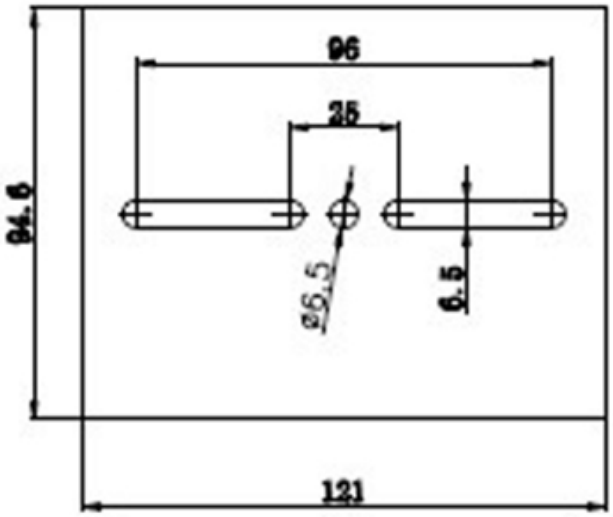
96
35
94.6
Ø6.5
6.5
121

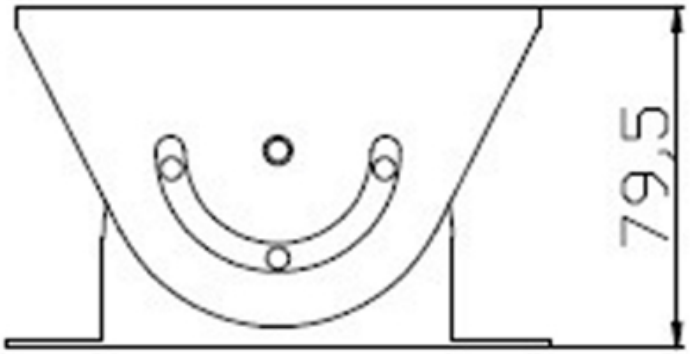
79,5

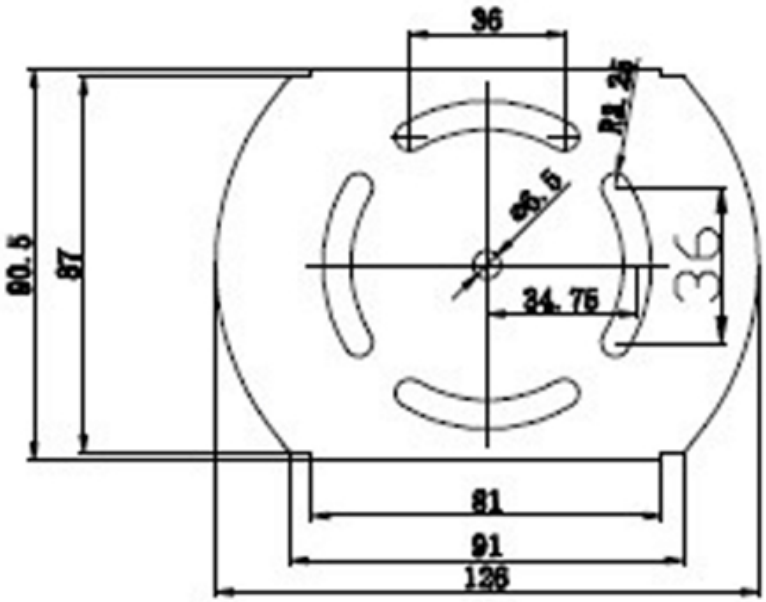
36
R1.25
Ø6.5
36
34.75
90.5
87
81
91
126

RELATED



TKH Security HSG04
Outdoor Wiper housing for a fixed box camera



TKH Security HSG05
Outdoor fixed housing, 90-260VAC