JBFD50

Junction box, for FD50xxM

DESCRIPTION

The JBFD50 is the junction box for the FD50xxM fixed dome cameras from the 5000-series cameras.

FEATURES

- Aluminum alloy material with surface spray treatment
- Bottom inlet and side inlet
- Available for wall or ceiling mounting
- Water-proof design

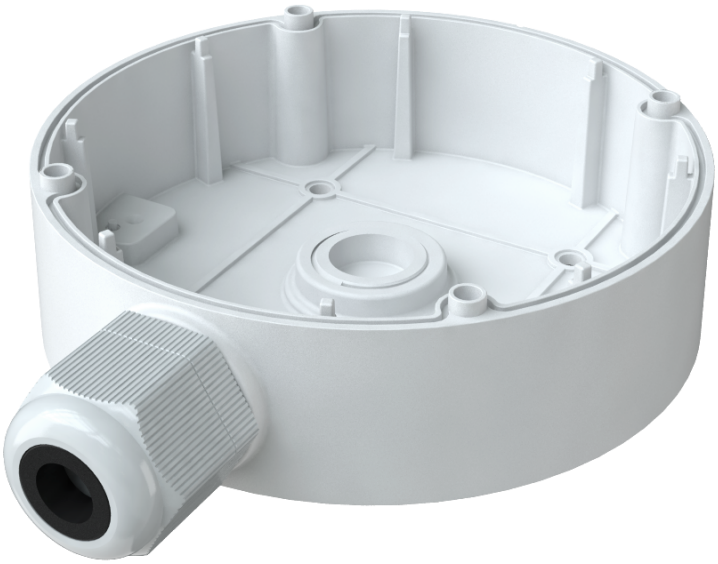

Description

(c) 20260210

Mechanical	
Material	Aluminum alloy
Color	RAL 9003 (signal white)
Dimensions (H x W x D)	41 x 139.3 x 139.3 mm
Weight	0.360 kg
Load Bearing	The wall must be strong enough to withstand at least 3 times the weight
	of the complete camera assembly
Working Temperature	-40 .. +60 °C (-40 .. +140 °F)
Working Humidity	10 .. 90 % RH

Ordering Information	
JBFD50	Junction box, for FD50xxM

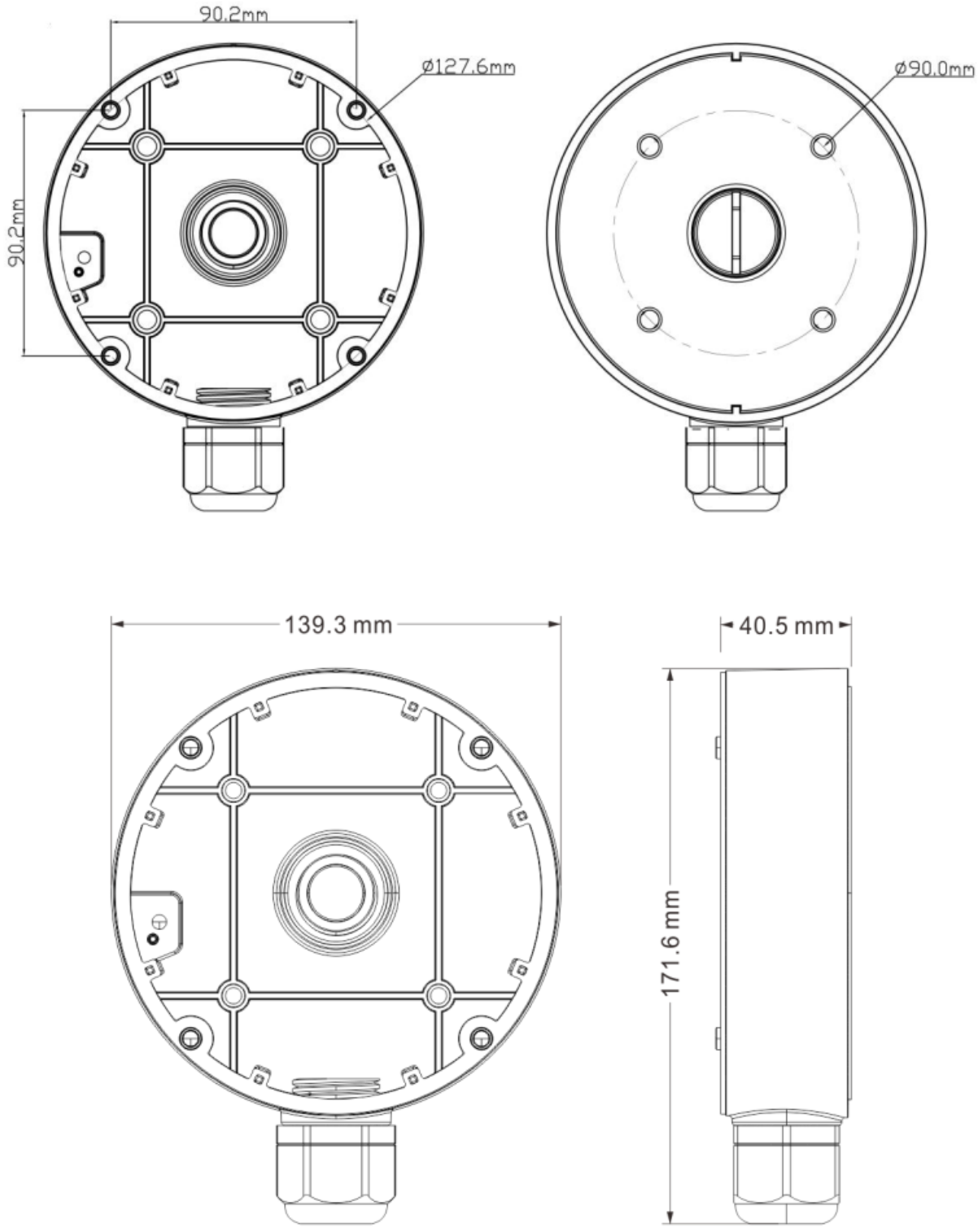
90.2mm
Ø127.6mm
90.2mm
Ø90.0mm
139.3 mm
40.5 mm
171.6 mm

RELATED



TKH Security FD5006M
6MP IP Fixed dome camera with 5x motor zoom, IR, 1/2.5"



TKH Security FD5008M
4K IP Fixed dome color camera with 4x motor zoom, 1/1.8" CMOS



TKH Security WMFD50
Wall mount, for FD50xxM



TKH Security PM50
Pole mount, for BL50xxM, FD50xxM, FE5012



TKH Security WM50
Corner mount, for FD50xxM, FE5012