JBFE50

Junction box, for FE5012

DESCRIPTION

The JBFE50 is the junction box for the FE5012 fisheye camera from the 5000-series cameras.

FEATURES

- Aluminum alloy material with surface spray treatment
- Bottom inlet and side inlet
- Available for wall or ceiling mounting
- Water-proof design

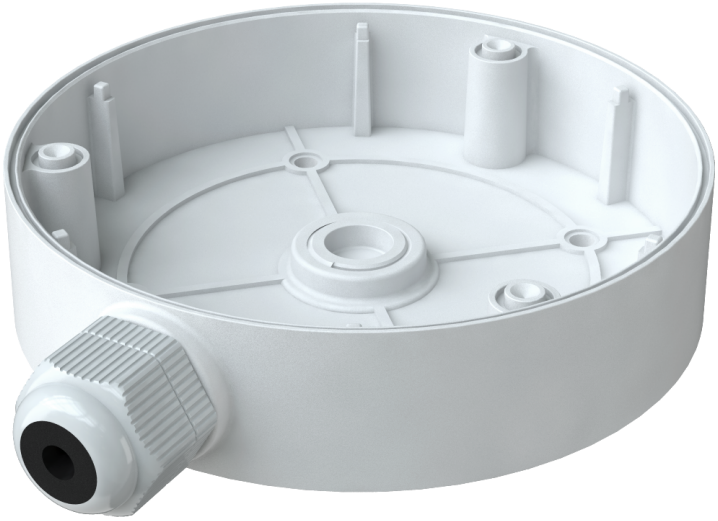

Description

(c) 20260210

Mechanical	
Material	Aluminum alloy
Color	RAL 9003 (signal white)
Dimensions (H x W x D)	33 x 131 x 131 mm
Weight	0.236 kg
Load Bearing	The wall must be strong enough to withstand at least 3 times the weight
	of the complete camera assembly
Working Temperature	-40 .. +60 °C (-40 .. +140 °F)
Working Humidity	10 .. 90 % RH

Ordering Information	
JBFE50	Junction box, for FE5012

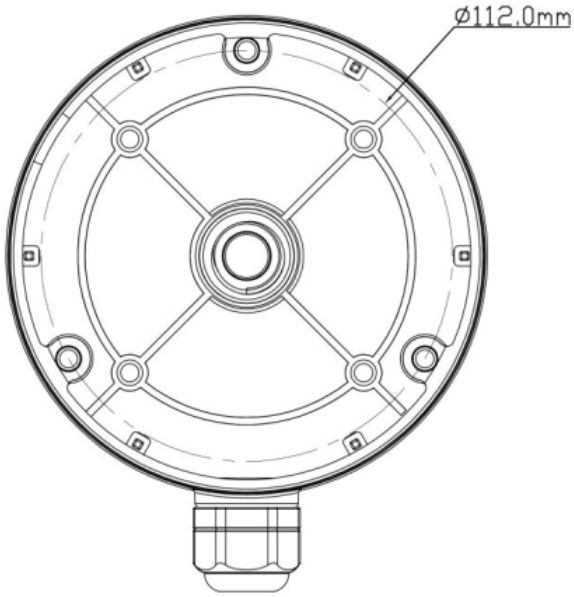
Ø112.0mm

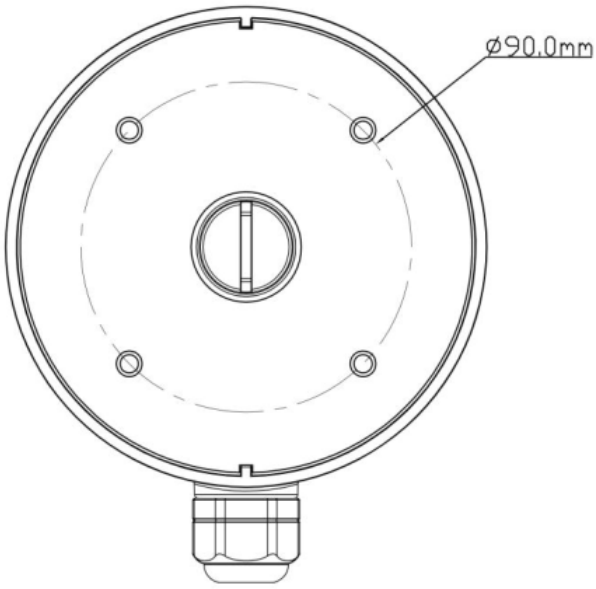
Ø90.0mm

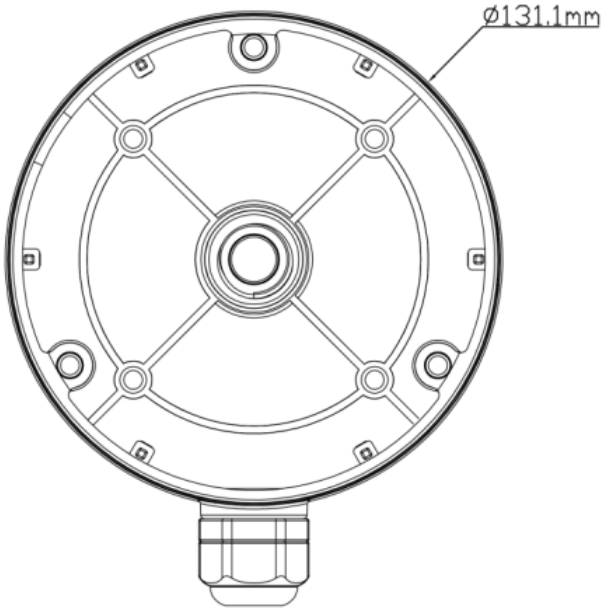
Ø131.1mm

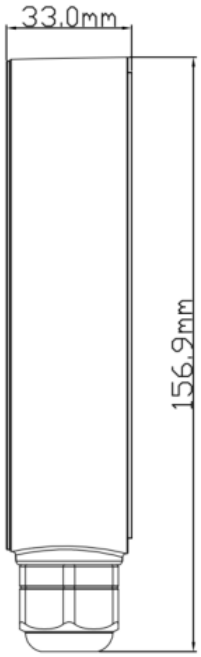
33.0mm
156.9mm

RELATED



TKH Security FE5012
12MP IP Fixed dome camera, IR, 1/1.7" CMOS



TKH Security PM50
Pole mount, for BL50xxM, FD50xxM, FE5012



TKH Security WM50
Corner mount, for FD50xxM, FE5012