# SA-PTZ T (EOL)

**Safe Area PTZ Thermal Camera 316L**

## DESCRIPTION

*** Discontinued. Replaced by SA3-PTZ T***
The SA-PTZ T camera housing is a rugged corrosion proof thermal PT camera station designed for use in onshore, offshore, marine and heavy industrial environments. The camera housing is constructed from electro-polished 316L stainless steel for maximum corrosion protection and is fitted with an 316L sun-shield and a thermostatically controlled heater. The camera's germanium window is 70 mm in diameter, large enough to suit all thermal modules from 7.5 mm to 100mm. The housing is not sold separately, it is only available in combination with a Siqura thermal module TC-336 or TC-640 and an RJ45 interface (INT-RJ).

## FEATURES

- Corrosion protected 316L stainless-steel
- 70 mm DLC/AR coated germanium window
- Supports all thermal modules from 7.5 to 100 mm
- Ingress protection rating IP66 and IP67
- 360° Continuous rotation, -90° to +90° tilt range
- Integrated power supply (24, 115 or 230 Vac)
- Integrated heater
- Electro-polished 316L sun-shield
- Low maintenance



## Description

### Thermal imaging

The SA-PTZ T is fitted with a germanium window, which makes the camera suitable for long-wave infrared (LWR)  thermal imaging. Siqura’s TC-336 and TC-640 thermal modules are made to built in this camera. Its large window size (70 mm in diameter) make it suitable for lenses up to 100 mm.

### Corrosion free 316L construction

The compact SA-PTZ T is designed to withstand the heavy mechanical stress and vibration on board a marine vessel. The thermal PT-camera is made of corrosion proof 316L stainless steel suited to operate in salty or sulfur rich environments. The germanium window is treated with a special hard diamond like coating to protect it against scratches and chemical substances.

### Integrated  heater

The built-in heater regulates the humidity inside the camera and prevents ice or condensation to form on the camera’s window.

### Special options

This camera is normally used in upright position, in special cases it is possible to have this camera modified mount it up-side down. Vessels that operate in polar regions require ICE Class cameras, running at an ambient temperature down to -30°C. These temperatures require different sealing materials and grease. Please, contact Siqura for these special models.

(c) 20240802

| Mechanical | | | |
|---|---|---|---|
| Ingress protection rating | IP66 / IP67 | | |
| Impact rating (casing) | IK10 | | |
| Body material | Electro-polished 316L stainless steel | | |
| Window | AR/DCL coated germanium window | | |
| - Size | diameter 70 mm; 3 mm thick | | |
| Sunshield | Standard | | |
| Rotation | 360° Continuous rotation | | |
| Tilt angle | +90° to -90° | | |
| Variable speed | up to 36°/sec pan and 18°/sec tilt (peak) | | |
| Drive mechanism | Direct drive | | |
| Backlash | <0.1° | | |
| Preset accuracy | 0.04° | | |
| Operating temperature | -20 °C to +75 °C (-4 °F to +167 °F) | | |
| Cable entry | 2x M25 | | |
| Weight | 24 kg | | |

| Electrical | | | |
|---|---|---|---|
| Power rating | SA-PTZ24T | SA-PTZ115T | SA-PTZ230T |
| - Voltage | 24 Vac +/-10% | 115 Vac +/-10% | 230 Vac +/-10% |
| - Frequency | 50/60Hz | 50/60Hz | 50/60Hz |
| - Dissipation | 80 W max | 80 W max | 80 W max |
| Internal Heater | Standard | | |
| - Heater control | On:12°C +/- 4°C; Off: 20°C +/- 3°C | | |
| - Heater power dissipation | 18W | | |

| Ordering information | |
|---|---|
| SA-PTZ24T | Safe Area PTZ Thermal Camera 316L 24VAC |
| SA-PTZ115T | Safe Area PTZ Thermal Camera 316L 115VAC |
| SA-PTZ230T | Safe Area PTZ Thermal Camera 316L 230VAC |

| Maintenance kits | |
|---|---|
| SA-MK PTZ | Maintenance kit SA PTZ camera: O-Ring, screws, desiccant bags |

## DIMENSIONS IN MM

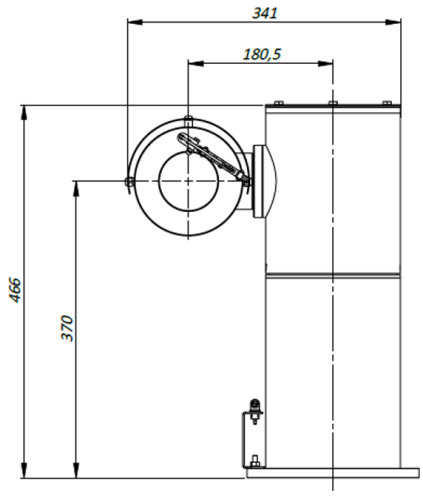


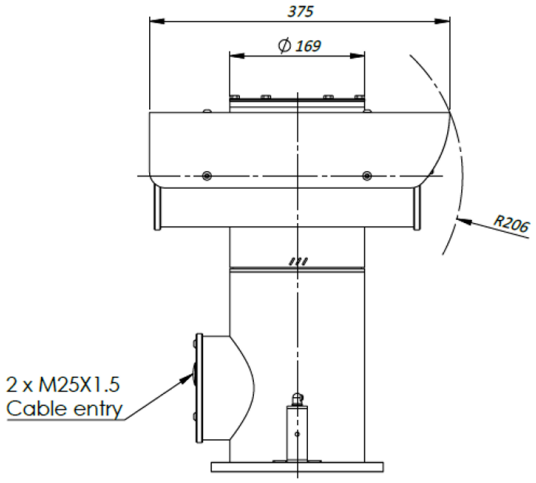


MOUNTING PATTERN

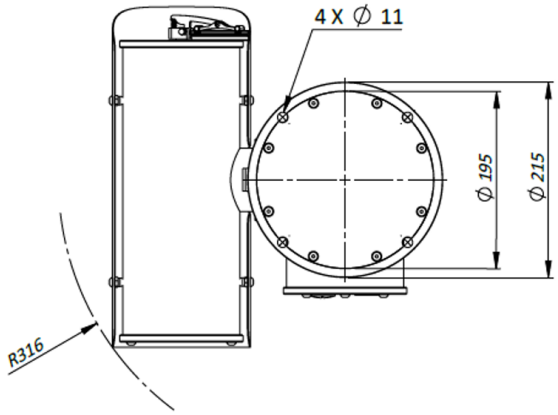

| Housing | Optical camera | Thermal camera | | Interface | | | | | |
|---|---|---|---|---|---|---|---|---|---|
| | BC822v2H3-SA | TC(R1)-336 | TC(R1)-640 | INT-RJ | INT-RJ5<br>INT-RJ10 | INT-SM | INT-SM5<br>INT-SM10 | INT-MM | INT-MM5<br>INT-MM10 |
| SA-FIX24 | ✓ | | | ✓ | | ✓ | | ✓ | |
| SA-FIX24W | ✓ | | | ✓ | | ✓ | | ✓ | |
| SA-FIX24T | ✓ | ✓ | ✓ | ✓ | | ✓ | | ✓ | |
| SA-PTZ24 | ✓ | | | ✓ | | | | | |
| SA-PTZ24T | | ✓ | ✓ | ✓ | | | | | |
| SA-PTZ24D | ✓ | ✓ | ✓ | ✓ | | | | | |

*This charts also applies to the SA cameras versions for 115 Vac and 230 Vac.*

## RELATED



**Siqura SA mounting accessories**
316L Mounting accessories for the SA-FIX and SA-PTZ series



**Siqura INT-RJ / INT-SM / INT-MM (EoL)**
Network Interface and cable tail of the Siqura SA or EX cameras



**Siqura**
Safe Area PTZ Thermal Camera 316L