# UP-WM

**Wall mount bracket for UPxx**

## DESCRIPTION

The UP-WM wall-mount bracket is specially designed for the UP-series cameras. Its slim but robust design gives the camera proper stability and a neat installation, hiding the connection cords.

## FEATURES

- Wallmount for UP33 and UP36
- Die-cast aluminum
- 360° view

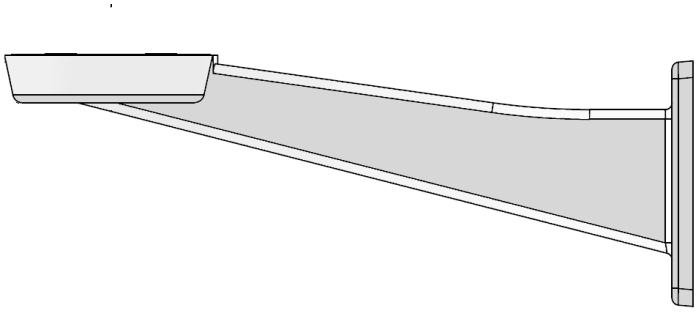

| UP-WM | |
|---|---|
| Material | Die-cast Aluminum |
| Finish | powder coated |
| Cable management | yes |

| Ordering info: | |
|---|---|
| UP-WM | Wall mount bracket for UPxx |

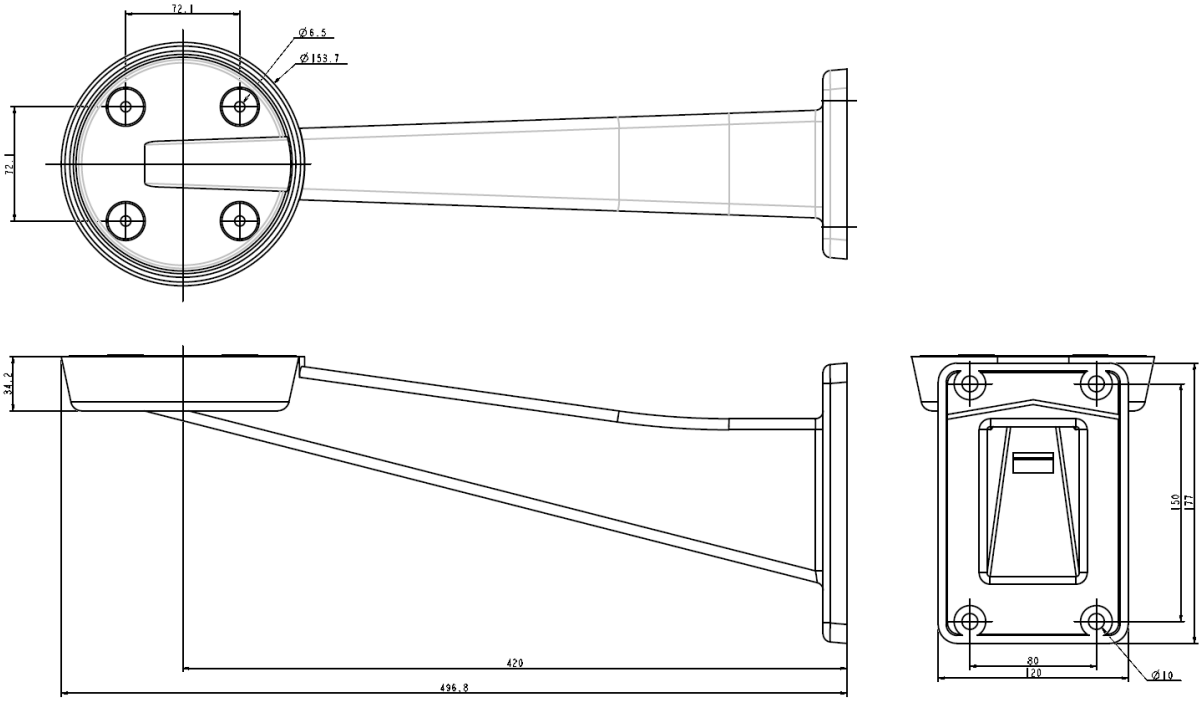
72.1
Ø6.5
Ø153.7
72.1
34.2
420
496.8
150
177
80
120
Ø10

## RELATED



**Siqura UP33**
Upright PTZ 33x zoom



**Siqura UP36**
Upright PTZ 36x zoom