VBS 2020

Analog video link over multi-mode (MM) fiber

DESCRIPTION

Siqura's VBS 2020 series offers an affordable fiber optic video link. The built-in automatic gain control (AGC) allows plug-and-play installation and maintenance-free operation. V

FEATURES

- Adjustment-free installation and operation (AGC)
- Easy to install
- Compact stand-alone transmitter
- Triple receiver
- High SNR (better than 60dBw)



The very compact VBS 2020 TX matchbox transmitter is designed to operate over a broad temperature range and is therefore suitable for use close to cameras or even inside outdoor camera housings.
The VBS2020 receivers are available in standalone or rack-mount housings. The rack-mount versions is designed to be slotted into MC 10 or MC 11 power supply cabinets. Stand-alone versions (/SA) can be mounted on any flat surface.
The space-saving VBS 2020 RX-3 receivers can provide up to 33 video transmission links, using only a single MC 10 or MC 11 power supply cabinet.

Video	
Video format	NTSC, PAL, SECAM
Input/output level	1 Vpp (3 dB)
Bandwidth (-3 dB)	10 MHz
Differential phase	5.0°
Differential gain	5.0%
Signal-to-noise ratio	
Short link	60 dBw
Over optical budget	beter than 45 dBw
Connector type	75 BNC (gold-plated center pin)
Management	
LED status indicators	
DC	Power-on indicator (green)
NV	No video on input or output (red)
Environmental	
Operating temperature	-40 °C to +74 °C (-40 °F to +165 °F)
Storage temperature	-55 °C to +85 °C (-67 °F to +185 °F)
Relative humidity	up to 95% with no condensation
MTBF (Mean Time Between Failures)	100,000 hours
Safety and EM	IEC/EN 60950-1, IEC/EN 60825, IEC/EN 61000, EN 50130-4, EN 50081-1,
	EN 55022, FCC part 15
Powering	
Power consumption	
- VBS 2020 TX	0.5 W
- VBS 2020 RX-3	5.2 W
Rack-mount units	MC 10 and MC 11 power supply cabinets
Stand-alone units (/SA)	
VBS 2020 RX-3 /SA	11 to 16 Vdc (PSA-UN12 or PSR-12DC)
VBS 2020 TX	8 to 25 Vdc
Mechanical	
VBS 2020 TX	
- Dimensions (h x w x d)	33 x 60 x 90 mm (1.3 x 2.4 x 3.5 in)
- Weight	140 g (4.93 oz)
VBS 2020 RX-3	
- Dimensions (h x w x d)	128 x 35 x 190 mm (5.0 x 1.4 x 7.5 in)
- Weight	450 g (15.9 oz)
Optical	
Fiber type	MM (62.5 µm)
Output wavelength	850 nm

Specs

Optical	
System link budget	16 dB*
Link length	5 km
Minimum link loss	0 dB
Output power	-18 dBm*
Input sensitivity	-34 dBm
Connector type	ST
*For 50/125 m fiber, subtract 4 dB	

Ordering information	
VBS 2020 TX	Video transmitter, matchbox 1x MM
VBS 2020 RX-3	Triple video receiver, 850 nm multimode, AGC, RM
VBS 2020 RX-3 /SA	Stand-alone version of rack-mount models

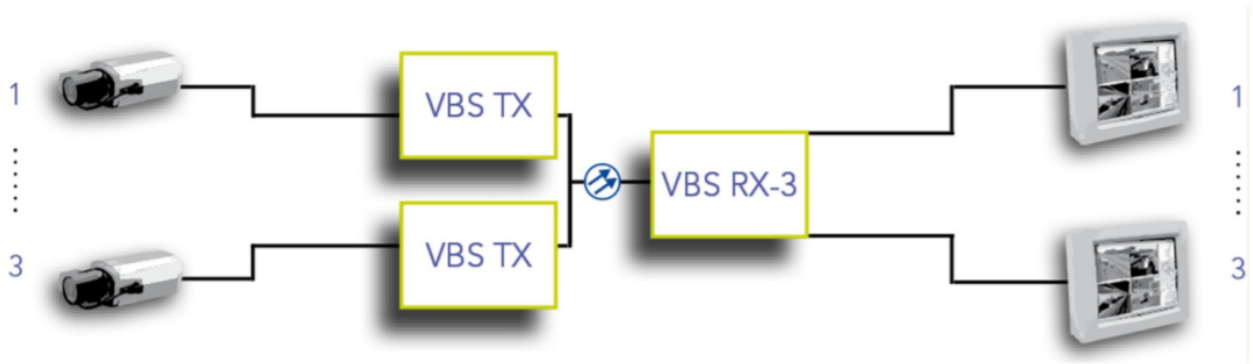
1
3
VBS TX
VBS TX
VBS RX-3
1
3

RELATED

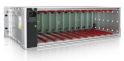

Siqura MC 10 AC, MC 11 AC
19 power supply cabinet



Siqura PSA-UN12, PSR-12DC
Stand-alone power supplies