WM17B

Corner mount with junction box, for 2000/5000-series PTZ cameras

DESCRIPTION

The WM17B is a corner mount with junction box for 2000/5000-series PTZ cameras.

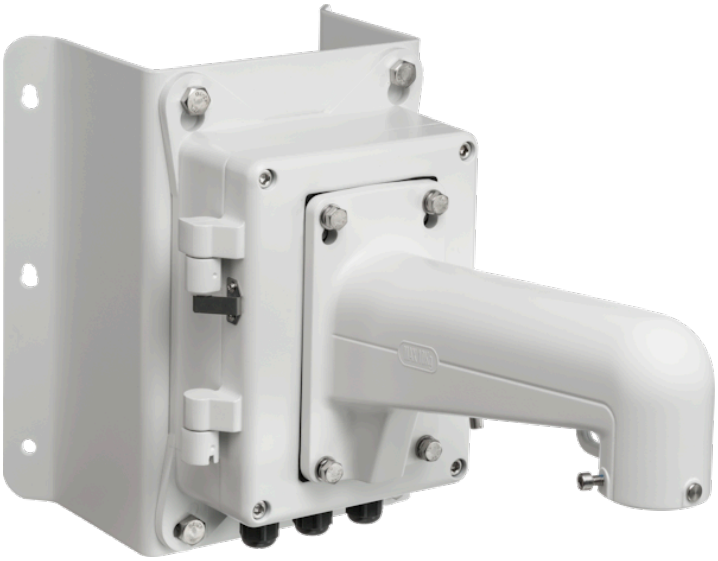

Mechanical	
Material	Aluminium alloy and Steel
Color	RAL 9003 (signal white)
Dimensions (H x W x D)	256 x 314 x 546 mm (10.08 x 4.49 x 21.50 in)
Weight	8.4 kg (18.5 lbs)

Ordering Information	
WM17B	Corner mount with junction box, for PD20xx PTZ dome series

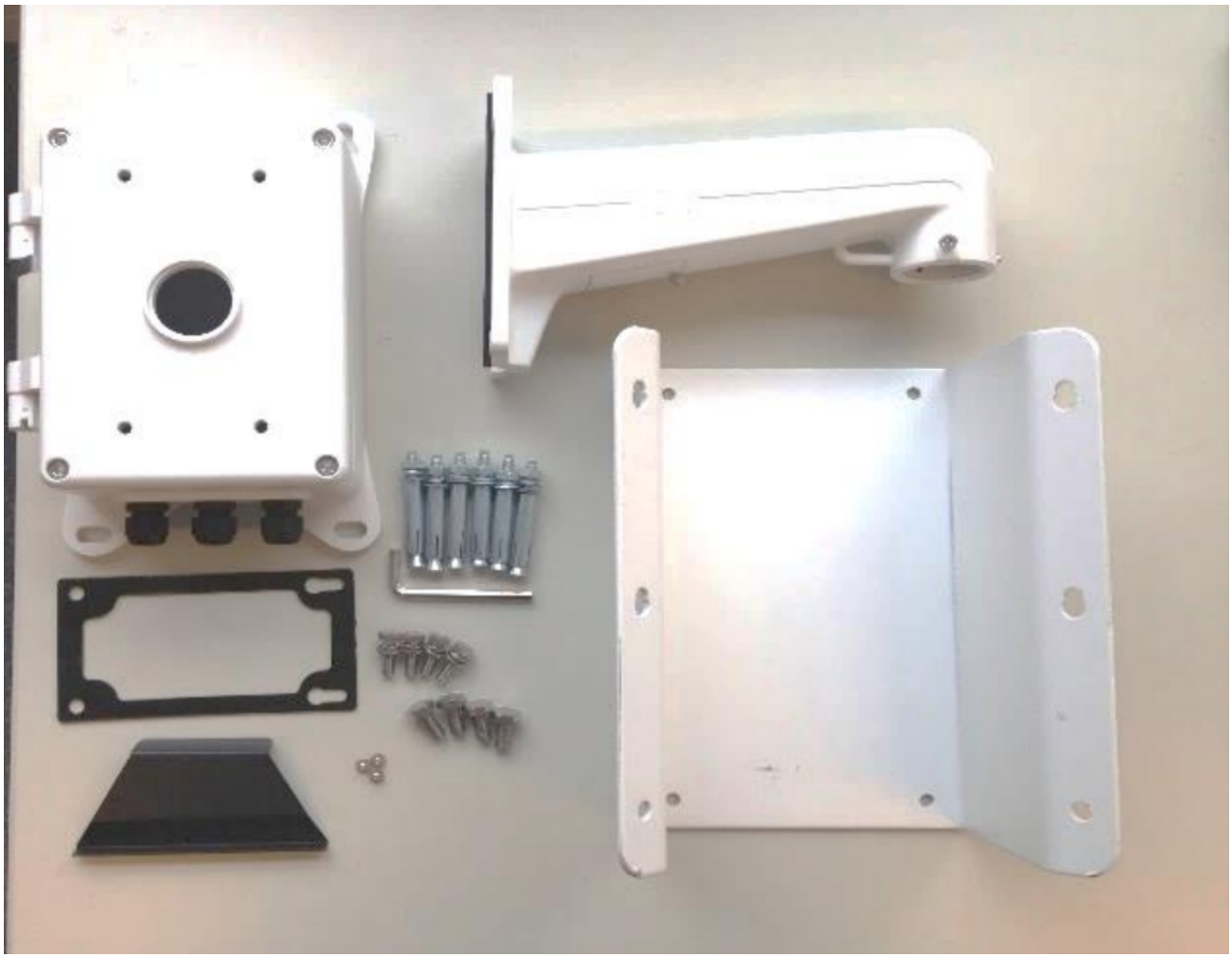

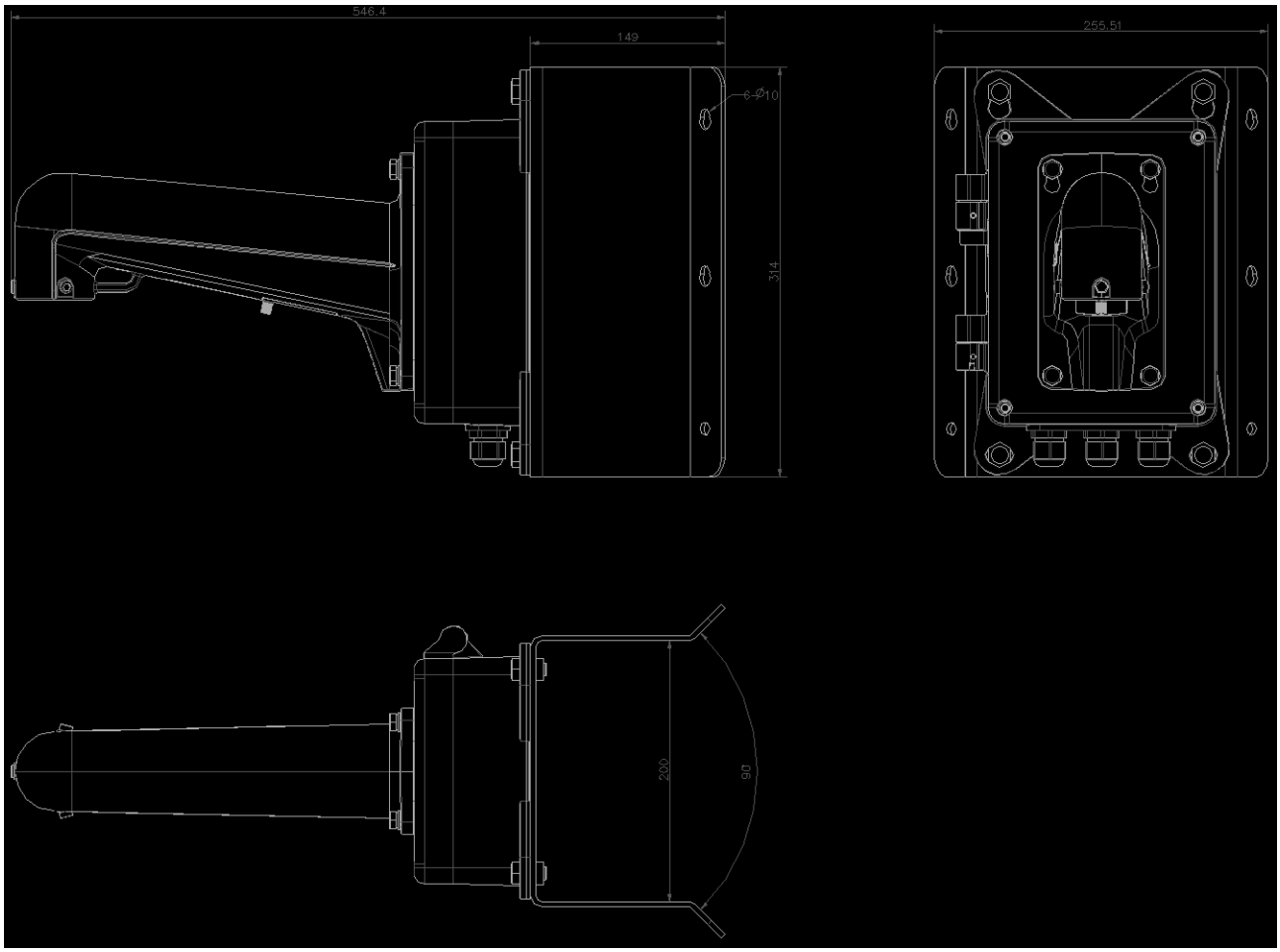
546.4
149
6-Ø10
314
255.51
200
90

RELATED



TKH Security WM12
Wall mount, for PD20xx PTZ dome series



TKH Security WM12B
Wall mount with junction box, for 2000/5000-series PTZ cameras



TKH Security PM07
Pole mount, for PD20xx PTZ dome series



TKH Security PM07B
Pole mount with junction box, for 2000/5000-series PTZ cameras



TKH Security WM17
Corner mount, for PD20xx PTZ dome series



TKH Security CM11
Ceiling mount, for 2000/5000-series PTZ cameras



TKH Security CM15
Ceiling mount, 25cm, for 2000/5000-series PTZ cameras



TKH Security WM16
Gooseneck mount, for 2000/5000-series PTZ cameras